PASSTCERT
QUESTION & ANSWER

Higher Quality
Better Service!

We offer free update service for one year
HTTP://WWW.PASSTCERT.COM

Exam : 350-026

Title : CCIE SP Content Networking ENU

Version : DEMO

1.To maintain schema-consistency in an LDAP Directory Information Tree (DIT), the LDAP standard specifies that:

A.The client first downloads the DIT schema from the server and then makes sure every request it sends conforms to the schema; The server therefore doesn't have to check DIT for consistency

B.The operator periodically scans the DIT to check that the schema is not violated, and manually corrects any inconsistencies caused by clients

C.The server periodically scans the DIT to check that the schema is not violated, and sends a notification to the operator when it finds an inconsistency caused by clients

D.The server periodically converts the DIT to an SQL database; Schema-checking is done by the SQL engine and then the database is converted back to a DIT

E.The server checks every client operation for schema consistency, and ignores requests that would result in a DIT inconsistency

Correct:E

2.Click the Exhibit button to view the topology. The diagram shows an L2 switched campus. Switch X is the STP root and switch Y is the standby root. How many of the links in the diagram will be placed in blocking mode by STP?

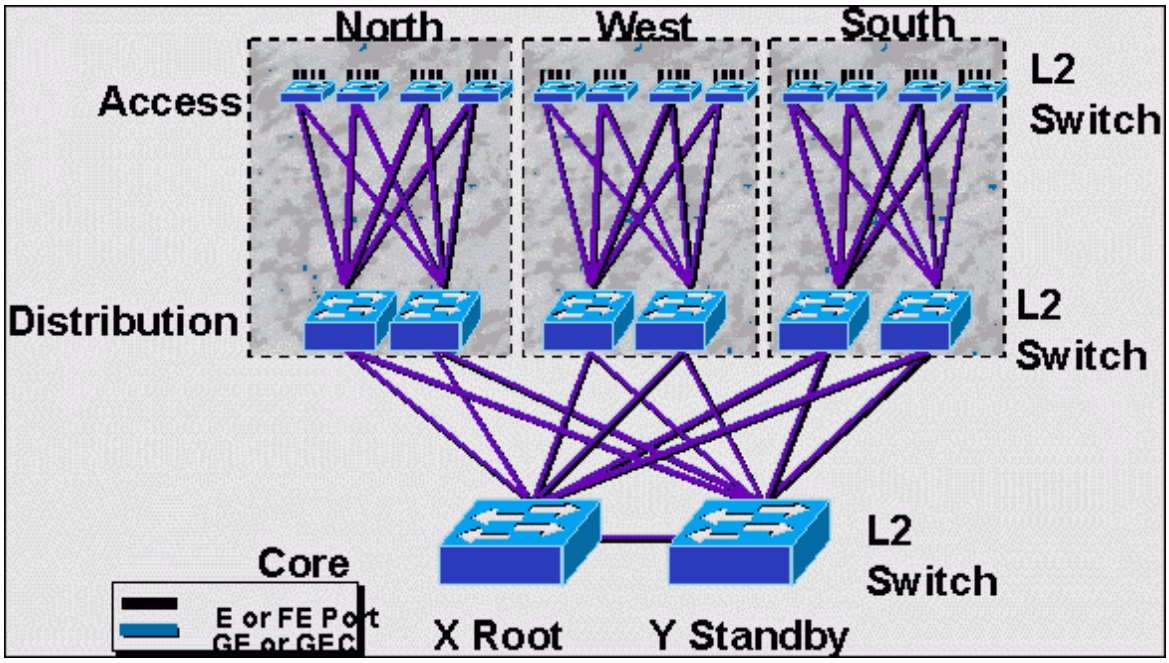

A.6

B.7

C.12

D.13

E.18

F.19

Correct:E

3.In ACNS 5.X Content Delivery Network what is the purpose of defining a root Content Engine for a channel?

A.This Content Engine retrieves content from other Content Engines within the CDN.

B.This Content Engine is used by the administrator to manage the Content Delivery Network.

C.This Content Engine downloads the content from the origin server and distributes the content to all the

Content Engines that belong to the Channel.
D.This Content Engine downloads the content from the Content Distribution Manager and distributes the content to all the Content Engines that belong to the Channel.
E.None of the above
Correct:C
4.What is the usual procedure taken if an unrecognized non-mandatory ISDN IE is received by a network?
A.Final handle the call
B.Final handle the call if 2 such IE is received
C.Ignore only if the IE received is not CS0, otherwise final handle the call
D.Send a Facility msg to the user notifying the user of sending unknown IEs but don't final handle
E.Ignore the IEs
Correct:E
5.Click the Exhibit to view the topology. In this network, Host A is trying to reach Host D. There is no routing protocol running, but Router B and C have the following static routes configured: Router B: ip route 10.1.3.0 255.255.255.0 ethernet 1 Router C: ip route 10.1.1.0 255.255.255.0 ethernet 1

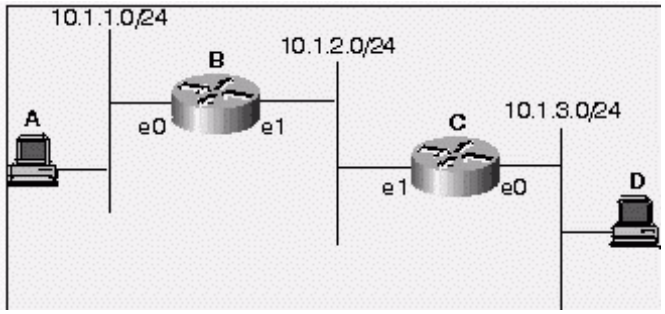

A.This will not work because Router B has no idea of how to forward traffic to the 10.1.3.0/24 network.
B.This will work because Router B will recognize that Router C is on the 10.1.2.0/24 network through a router discovery protocol and will forward traffic for 10.1.3.0/24 to Router C.
C.This will not work because a broadcast interface in a static route command cannot be specified.
D.This will work because Router B will ARP for Host D's IP address on the 10.1.2.0/24 network and Router C will answer.
Correct:D
6.On the CSS, how would you configure a domain name content rule for www.acme.com?
A."www.acme.com/*"
B."/www.acme.com/*"
C.url "//www.acme.com/*"
D.url "/www.acme.com/*"
Correct:C
7.ATM cells are received across a link on a:
A.Known PVC or SVC value
B.Known VCI or VPI value
C.Known PVC or VCI value
D.Known SVC or VPI value
Correct:B

8.MPLS traffic engineering routing information is carried by:

A.BGP MEDs

B.MP-BGP

C.OSPF Opaque LSAs or IS-IS TLVs

D.RTP or RTCP packets

Correct:C

9.WCCP is a communication protocol used between routers and cache devices. On what port does this protocol communicate?

A.80

B.2180

C.8080

D.52

E.2048

Correct:E

10.Click the Exhibit button to view the topology. If Switch C1 is the root of the spanning tree for all VLANs in the network, what ports will be blocking on Switch C1?

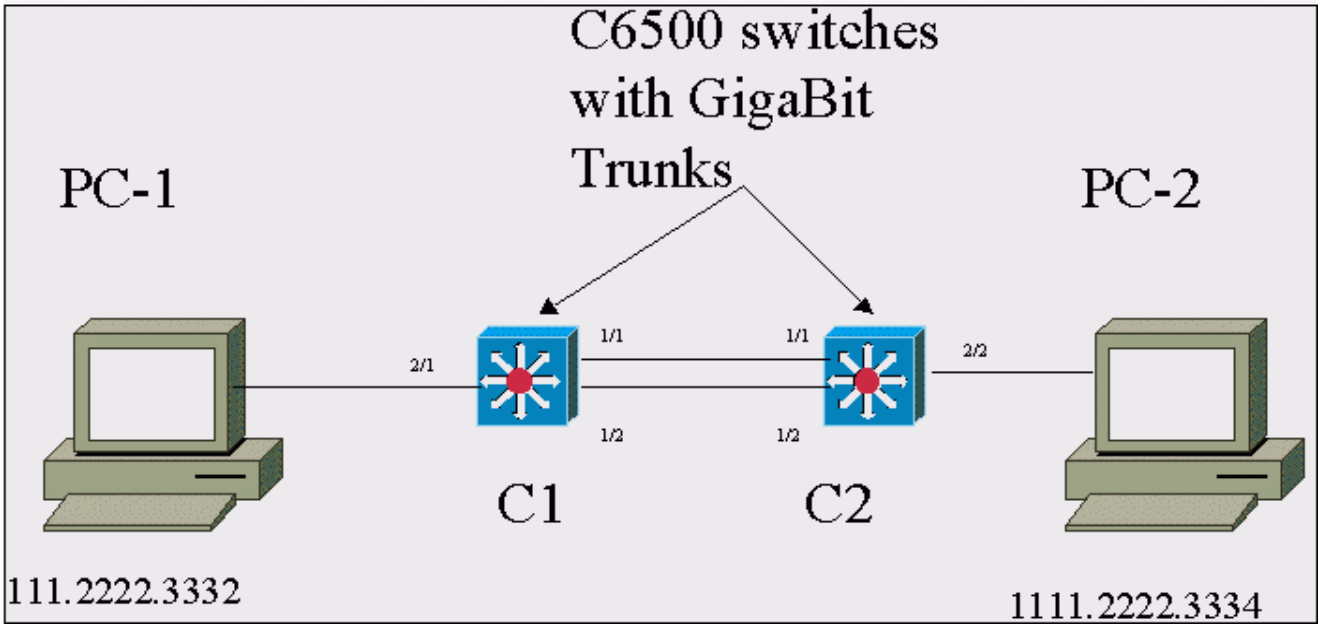

A.1/1 only

B.1/2 only

C.Both 1/1, and 1/2

D.Not enough information

Correct:D

11.Click the Exhibit button. In the shown diagram, the Cisco Cache Engines are configured in a reverse proxy fashion. On the CSS, for what type of service must the cache engines be configured?

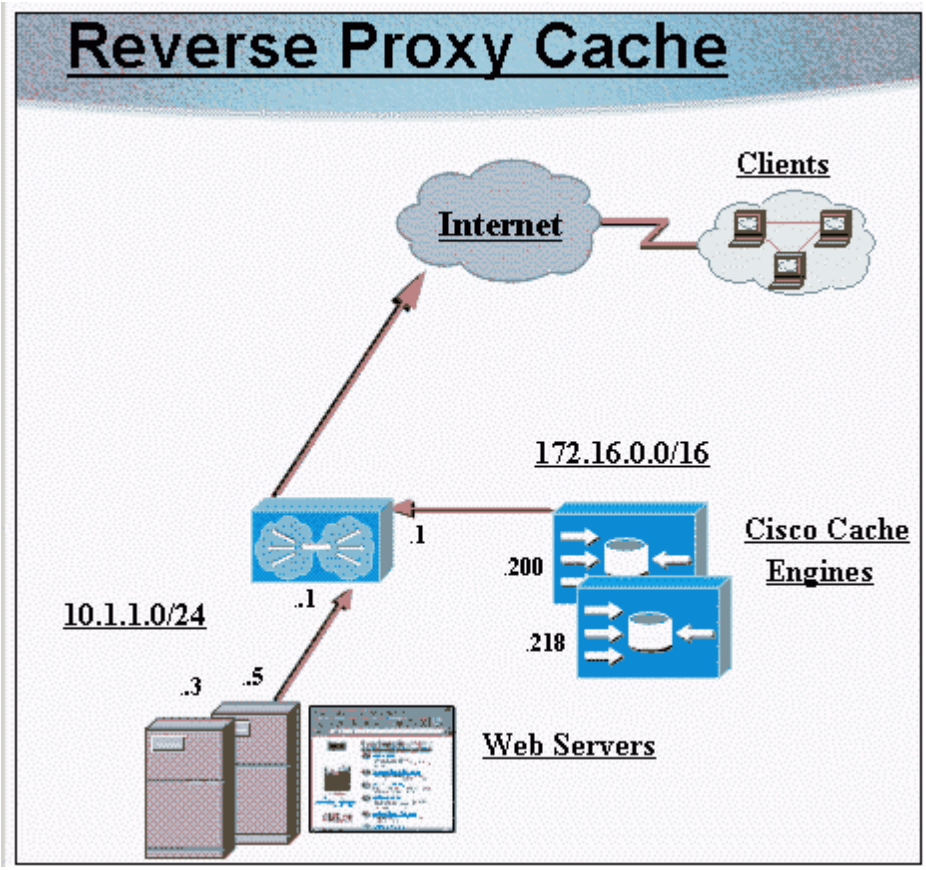

A.Type transparent-cache

B.Type proxy-cache

C.Type local

D.Type redirect

E.No type needs to be specified

Correct:A

12.Click the Exhibit button. When loadbalancing RADIUS accounting information, the design needs to:

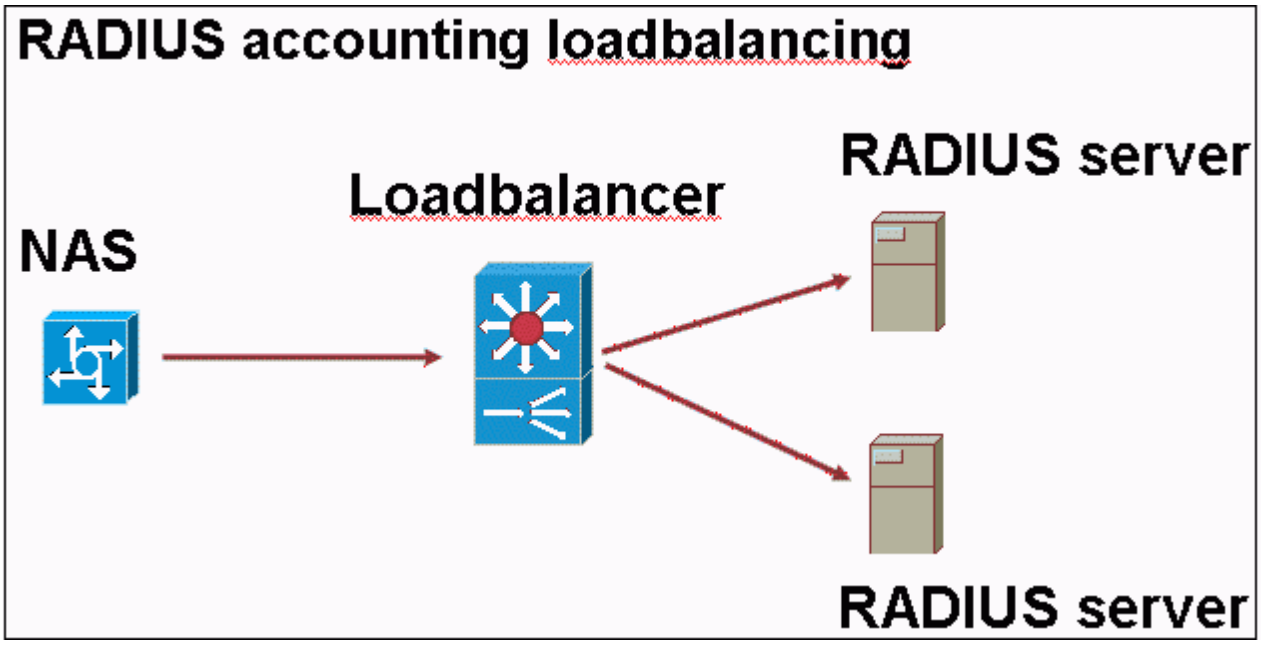

A.Ensure the accounting data goes to the same server as the server that authenticated the user
B.Incorporate a method to synchronise the accounting databases on the servers
C.Ensure Start/Stop records of the same accounting session are sent to the same server
D.Match the RADIUS Authenticator of Authorization and Accounting information
E.Incorporate a method to synchronize TACACS+ and RADIUS accounting information

Correct:B C

13.An HTTP response code of 404 indicates:

A.The transaction is successful.
B.Object moved.
C.Bad request.
D.Unauthorized.
E.Not found.

Correct:E

14.What are the 4 bridge port states in a transparent bridging environment?

A.Spanning, learning, blocking, forwarding
B.Connecting, learning, spanning, forwarding
C.Listening, learning, blocking, forwarding
D.Broadcasting, listening, forwarding, blocking
E.Learning, forwarding, connecting, blocking

Correct:C

15.A router is receiving updates for a subnet from different routing protocols. The administrator wishes to take advantage of a path via a route with a less favorable Administrative Distance. What can be done to affect this without losing any of the updates?

A.Configure a static route with an Administrative Distance of 120
B.Use the Router Configuration mode command distance with an appropriate 'weight' for this subnet
C.Create a distribute-list to block this subnet
D.Modify the default-metric weight of the routing protocol offering the more favorable Administrative Distance

Correct:B

16.In box-to-box redundancy on the CSS, to configure an ip circuit (VLAN) as a redundant circuit, what command is used?

A.Redundant-circuit
B.Redundant-type-circuit
C.Redundancy
D.Redundancy-type-circuit
E.None of the above

Correct:C

17.Click the Exhibit button to view the topology. In this diagram, Host G is attempting to send a packet to Host A through Router E. All routers are running EIGRP, and Router E has installed the following route in its routing table: 10.1.1.0/24 via router F What will occur when Router E receives packets from Host G that are destined for Host A?

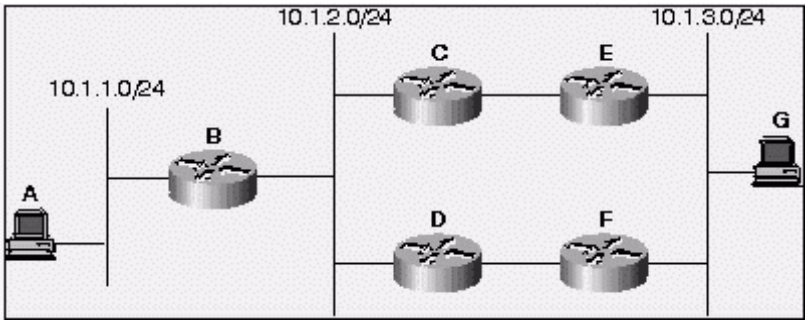

A.E cannot have a route to 10.1.1.0/24 through F; so it will always choose the path through C.
B.This is a routing loop; E will forward the traffic to F, and F will send the traffic back to E.
C.Router E will forward the traffic to Router F.
D.Router E will forward the traffic to Router F and send a 'host not reachable this direction' ICMP packet to Host G.
E.Router E will forward the traffic to Router F and send an ICMP redirect to Host G.

Correct:E

18.How does RADIUS implement AAA?

A.Authentication, Authorization and Accounting are in separate exchanges, yet on the same UDP connection. The entire connection is encrypted.
B.Authentication, Authorization and Accounting are in separate exchanges and each occurs on a different UDP connection. Only the authentication connection is encrypted.
C.Authentication, Authorization and Accounting are in separate exchanges and each occurs on a different UDP connection. Only the password in the authentication connection is encrypted.
D.Authentication, Authorization and Accounting are in separate exchanges, yet on the same UDP connection. Only passwords are encrypted.
E.Authentication and Authorization is combined in one exchange. Accounting happens in a separate exchange. Authentication and Authorization data are carried on a UDP connection. The user password is encrypted. Accounting data is carried unencrypted over another UDP connection.

Correct:E

19.The website www.foo.com is having problems. The PC you are troubleshooting from does not have a web browser or sniffer software installed. Which method is the next best way to verify that the website will return the web page with content:

A.tracert www.foo.com 80
B.ping www.foo.com
C.telnet www.foo.com 80 GET / HTTP/1.0
D.telnet www.foo.com 80
E.telnet www.foo.com 80 HEAD / HTTP/1.0

Correct:C

20.What is the proper format for the inverse DNS mapping for the following address: 198.133.219.25?

A.198.133.219.25.in-addr.arpa.
B.198.133.219.0.in-addr.arpa.
C.0.219.133.198.in-addr.arpa.
D.25.219.133.198.in-addr.arpa.
E.198.133.25.219.in-addr.arpa.

Correct:D