PASSTCERT
QUESTION & ANSWER

Higher Quality
Better Service!

We offer free update service for one year
HTTP://WWW.PASSTCERT.COM

Exam : **70-223**

Title : Configuring and Administering Microsoft Clustering Services by using Microsoft Windows 2000 Advanced

Version : DEMO

1. You are the cluster administrator for your company. You need to configure two Windows 2000 Advanced Server computers for use as cluster nodes. You need to implement fault-tolerance methods for the local storage. You also need to implement fault-tolerance methods for the external storage subsystem.

Each server contains two 9.3-GB hard disks. The external storage subsystem contains eight 10-GB hard disks. You need to ensure that the cluster can tolerate the failure of a single hard disk in either server and in the external storage subsystem.

Which two fault-tolerance methods should you use? (Choose two.)

A. Configure the hard disks in each server as Windows 2000 striped volumes.

B. Configure the hard disks in each server as Windows 2000 RAID 5 volumes.

C. Configure the hard disks in each server as Windows 2000 mirrored volumes.

D. Configure the hard disks in the external storage subsystem to use a hardware RAID 5 array.

E. Configure the hard disks in the external storage subsystem as Windows 2000 striped volumes.

F. Configure the hard disks in the external storage subsystem as Windows 2000 RAID 5 volumes.

Answer: CD

2. You are the administrator of a two-node Windows 2000 Advanced Server cluster. The cluster is configured as shown in the following diagram.

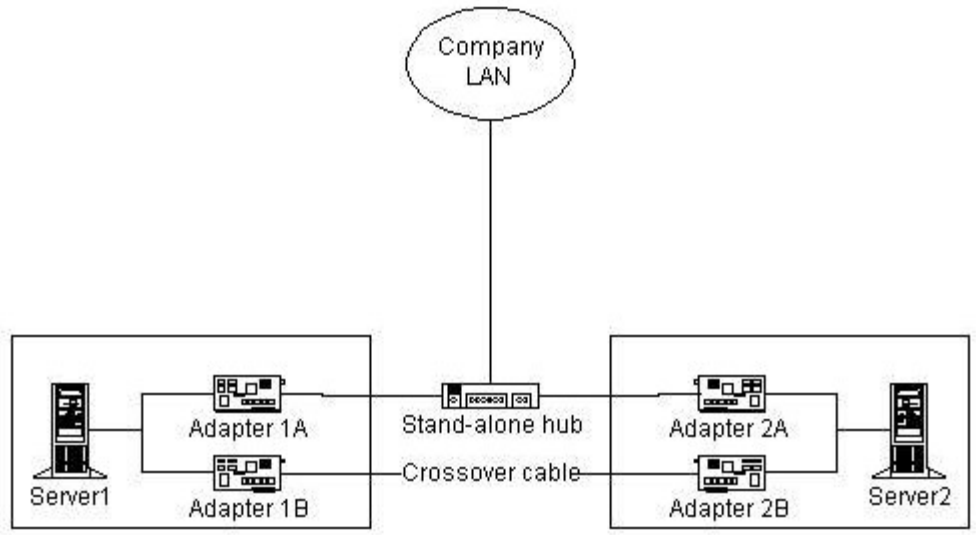

Adapter 1A and Adapter 2A are designated for Client access only. Adapter 1B and Adapter 2B are designated for Internal cluster communications only.

Which network components represent a single point of failure for internal cluster communications? (Choose all that apply.)

A. Adapter 1A

B. Adapter 1B

C. Adapter 2A

D. Adapter 2B

E. the crossover cable

F. the stand-alone hub

Answer: BDE

3. You are the administrator of two new computers. You need to configure the computers before installing Windows 2000 Advanced Server and the Cluster service. You install a new SCSI controller in each computer. You connect both controllers to an external disk array, which will serve as the cluster storage. The external disk array contains three hard disks. You start both servers and receive a BIOS error message on each server. The error message indicates that a device conflict has been detected on the SCSI bus. You need to correct this error. What should you do?

A. Change the SCSI ID to 0 on all three hard disks.

B. Change the SCSI ID on one of the SCSI controllers.

C. Add a SCSI bus terminator to the connector on the external disk array.

D. Add a SCSI bus terminator to the connectors on both SCSI controllers.

Answer: B

4. You are the administrator of two Windows 2000 Advanced Server computers named Server1 and Server2. You need to install the Cluster service on the servers. You install a SCSI array controller in each server.

Next, you connect the array controllers to an external storage subsystem by using SCSI cables. You need to install at least one SCSI terminator in the external storage subsystem at one or more of the locations shown in the exhibit. (Click the Exhibit button.)

Where should you install a SCSI terminator or SCSI terminators? (Choose all that apply.)

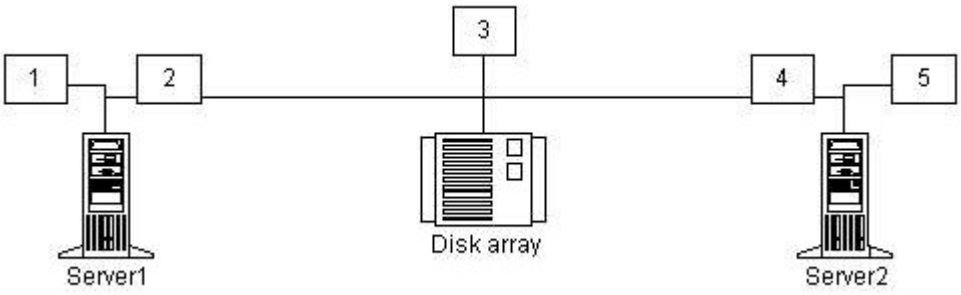

A. Install a SCSI terminator at location 1.

B. Install a SCSI terminator at location 2.

C. Install a SCSI terminator at location 3.

D. Install a SCSI terminator at location 4.

E. Install a SCSI terminator at location 5.

Answer: AE

5. You are the administrator of two Windows 2000 Advanced Server computers. You need to configure these servers for use as cluster nodes.

Each server contains two network adapters. One network adapter in each server is designated for Client access only. The second network adapter in each server is designated for Internal cluster communications only. You plan to connect the second network in each server to a stand-alone hub,

You need to configure the IP addresses for the four network adapters. You want to minimize the chance of a failure in the network connectivity on both servers. What should you do?

A. Configure static IP addresses for the network adapters that are designated for Client access only.

Configure static IP addresses for the network adapters that are designated for Internal cluster communications only.

B. Configure dynamic IP addresses for the network adapters that are designated for Client access only.

Configure dynamic IP addresses for the network adapters that are designated for Internal cluster communications only.

C. Configure static IP addresses for the network adapters that are designated for Client access only.

Configure dynamic IP addresses for the network adapters that are designated for Internal cluster communications only.

D. Configure dynamic IP addresses for the network adapters that are designated for Client access only.

Configure static IP addresses for the network adapters that are designated for Internal cluster communications only.

Answer: A

6. You are the administrator of two Windows 2000 Advanced Server computers named Server1 and Server2. You need to install the Cluster service on both servers to create a new cluster.

First, you install two network adapters in each computer. You connect and configure the network adapters as shown in the following diagram.

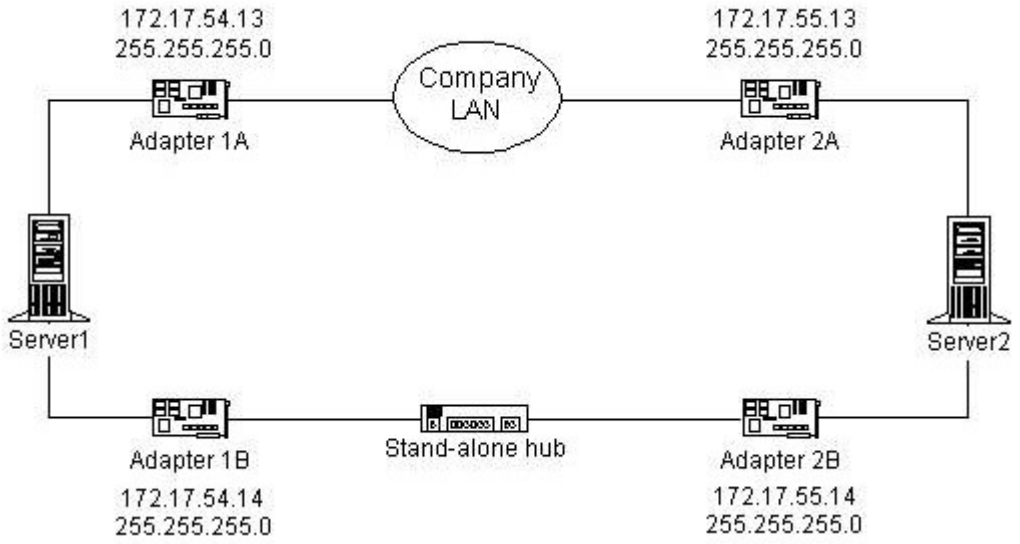

You successfully install the Cluster service on Server1 and create a cluster named Cluster1.

Next, you attempt to install the Cluster service on Server2 and to join Server2 to Cluster1. The Cluster service Setup fails, and you receive the following error message: "Setup was unable to locate Cluster1 on the network."

You want to complete the Cluster service Setup. What should you do?

A. Uninstall the Cluster service on Server1.

Change the IP address on Adapter 1A to 172.17.55.14.

Reinstall the Cluster service on both servers.

B. Uninstall the Cluster service on Server1.

Change the IP address on Adapter 1A to 172.17.55.13.

Change the IP address on Adapter 2B to 172.17.54.13.

Reinstall the Cluster service on both servers.

C. Change the IP address on Adapter 1A to 172.17.54.14.

Change the IP address on Adapter 2B to 172.17.55.13.

Run the Cluster service Setup on Server2.

D. Change the IP address on Adapter 1B to 172.17.55.13.

Change the IP address on Adapter 2A to 172.17.54.14.

Run the Cluster service Setup on Server2.

Answer: D

7. You are the administrator of a Windows 2000 Advanced Server computer. You need to prepare the server for use as a cluster node. The server contains a SCSI controller and three internal 4.3-GB hard disks. You plan to attach the server to an external storage subsystem that contains eight 18.3-GB hard disks. You connect the three 4.3-GB hard disks to the SCSI controller's internal connector. Next, you connect the external storage subsystem to the SCSI controller's external connector. When you start the server, you receive numerous BIOS error messages that indicate errors on the SCSI bus. Before installing the Cluster service, you need to be able to access the internal and external disks that are attached to the server. What should you do?

A. Replace the SCSI controller.

B. Replace the external SCSI cable.

C. Set the SCSI ID to 6.

D. Install an additional SCSI controller in the server.

Connect the external drive array to the new controller's external connector.

E. Disable the on-board SCSI termination on the SCSI controller.

Connect a SCSI terminator to the SCSI-out connector on the external storage subsystem.

Answer: D

8. You are the administrator of two Windows 2000 Advanced Server computers named Server1 and Server2. You install two network adapters in each server and then connect them as shown in the following diagram.

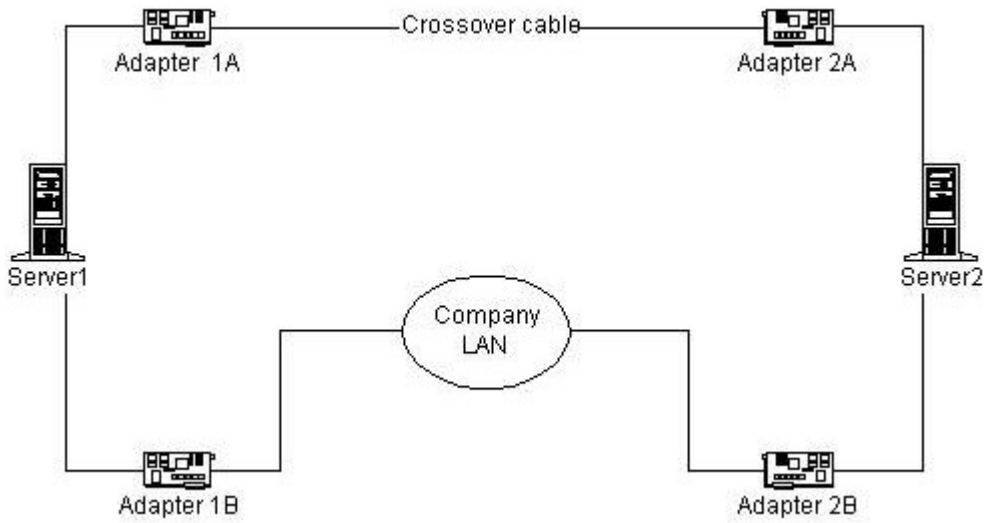

You turn off Server2 and begin installing the Cluster service on Server1. In the Cluster Service Configuration wizard, you designate Client access only for Adapter 1B. The wizard does not allow you to configure Adapter 1A, however.

You verify that the crossover cable between Adapter 1A and Adapter 2A is connected properly.

You need to designate Internal cluster communications only for Adapter 1A. What should you do?

A. Start Server2, and enter the BIOS setup screen.

Run the Cluster Service Configuration wizard on Server1.

Designate Adapter 1A for Internal cluster communications only.

B. Start Server2, and start Windows 2000 Advanced Server, but do not log on.

Run the Cluster Service Configuration wizard on Server1.

Designate Adapter 1A for Internal cluster communications only.

C. Disconnect the crossover cable from Adapter 1A.

Run the Cluster Service Configuration wizard on Server1.

Designate Adapter 1A for Internal cluster communications only.

Connect the crossover cable to Adapter 1A.

D. Disconnect the crossover cable from Adapter 1A.

Run the Cluster Service Configuration wizard on Server1.

Designate Adapter 1A for All communications.

Connect the crossover cable to Adapter 1A.

Use the Cluster Administrator to designate Adapter 1A for Internal cluster communications only.

Answer: A

9. You are the administrator of two Windows 2000 Advanced Server computers named Server1 and Server2. The servers have a Fibre Channel external storage subsystem that is connected as shown in the exhibit. (Click the Exhibit button.)

You discover that Server1 cannot access the external storage subsystem. You replace the fiber cable that connects Server1 to the Fibre Channel hub, but the problem persists. When you test the original fiber cable by using a cable tester, the test reveals no problems with the cable.

You swap the Fibre Channel Host-Based Adapter (HBA) in Server1 with the HBA in Server2. Server1 still cannot access the external storage subsystem. Hardware diagnostics report no failed ports on the Fibre Channel hub.

You need to be able to access the external storage subsystem from either server. What should you do?

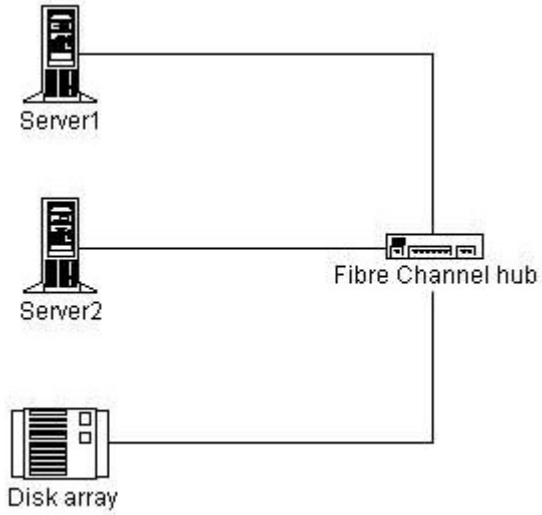

A. Reinitialize the Fibre Channel hub.

B. Replace the Fibre Channel HBA in Server1.

C. Replace the Gigabit Interface Converter (GBIC) for Server1 in the Fibre Channel hub.

D. Replace the Gigabit Interface Converter (GBIC) for the external storage subsystem in the Fibre Channel hub.

Answer: C

10. You are the administrator of a Windows 2000 Advanced Server cluster. The cluster provides file and print services to 1,500 client computers in the manufacturing division. One private network on the cluster is configured for Internal cluster communications only. One public network is configured for Client access

only. The average utilization for the network is 60 percent. Your company recently acquired another company, which will add 500 manufacturing client computers to the cluster environment within the next six months. You anticipate that this addition will increase network utilization. You want to modify the cluster environment to support the additional users. What should you do?

A. Designate the current public network for All communications.

B. Designate the current private network for All communications.

C. Add network adapters to each node for Client access only, configured in the existing manufacturing subnet.

D. Add network adapters to each node for Client access only, configured for a new manufacturing subnet and segment.

Answer: D

11. You are the administrator of a Windows 2000 Advanced Server cluster named Cluster1. Cluster1 consists of two nodes that are designated NodeA and NodeB. Each node has 8 GB of local disk storage. The cluster storage is composed of eight 10-GB hard drives in a hardware RAID 5 array.

The local disk storage on both nodes consists of a single volume, which is shared as C$. The cluster storage is shared as Z$.

You need to implement a disaster recovery strategy that includes regular backups of the cluster. You decide to use Windows 2000 Backup.

You want to accomplish the following goals:

Perform a full daily backup of the cluster storage, even if one node in the cluster fails.

Perform a full daily backup of the System State data on the node that owns the Quorum resource.

Perform a full daily backup of the local disk storage on the node that owns the Quorum resource.

Save all of the backed-up data to a single tape.

You take the following actions:

Connect a 100-GB tape drive to NodeA.

Use Windows 2000 Backup to create a backup selection file that includes \\Cluster1\Z$ and \\NodeA\C$. Save the backup selection file in C:\ClusterBack.bks on NodeA.

Use the Scheduler service on BackupSvr to launch Windows 2000 Backup daily. Use the following command line parameters: ntbackup backup systemstate c:\clusterback.bks

Which result or results do these actions produce? (Choose all that apply.)

A. The cluster storage is fully backed up daily, even if one node in the cluster fails.

B. The System State data on the node that owns the Quorum resource is fully backed up daily.

C. The local disk storage on the node that owns the Quorum resource is fully backed up daily.

D. All of the backed-up data is saved to a single tape.

Answer: D

12. You are the administrator of a Windows 2000 Advanced Server cluster. The cluster consists of two nodes that are designated NodeA and NodeB. You configure several groups and resources, but you cannot bring any of the Network Name resources online. Windows 2000 is installed in the default location on both NodeA and NodeB, and the Quorum resource is located on logical drive Q in the default path. You attempt to view the log of cluster activity, but the log does not appear. You want to be able to review as much detail of the cluster activity as possible so that you can identify the problem. What should you do?

A. Increase the size of the quorum log.

B. Increase the size of the System event log.

C. Configure the Application event log to not overwrite events.

D. On both nodes, configure a system environment variable named ClusterLog with a value of C:\winnt\cluster\cluster.log.

Answer: D

13. You are the administrator of a Windows 2000 Advanced Server cluster. You discover that the Quorum resource recovery log files on the cluster are corrupt. You need to restore the log files from a recent backup tape without overwriting other cluster data or system data. What should you do?

A. Perform a System State restore, and run the ntdsutil.exe command.

B. Restore the contents of the Quorum resource drive from the backup tape, and specify that the files be restored to their original location.

Use the Cluster Administrator to re-form the cluster.

C. Perform a System State restore, specifying an alternate location for the restore.

Copy the restored Quorum resource recovery files on the cluster to the quorum drive.

D. Use the Cluster Administrator to break the cluster.

Restore the contents of the Quorum resource drive from the backup tape, and specify that only the recovery log files be restored.

Use the Cluster Administrator to re-form the cluster.

Answer: C

14. You are the administrator of a file cluster. The cluster consists of two nodes that are designated NodeA and NodeB. The cluster storage subsystem contains more than 1 TB of data. This data is accessed by more than 1,000 users daily. Each day, you process approximately 20 requests to create new shares in the cluster.

The systemroot folder on both nodes is configured as the default for Windows 2000. The cluster contains the default Cluster group, which contains the following resources:

Network Name = Cluster

IP Address = 192.168.5.101

Physical Disk = F

You want to ensure that the maximum time for loss of cluster configuration data is one hour.

What should you do?

A. Schedule an hourly backup of the system state data on each node.

B. Schedule an hourly backup of the C:\winnt\Cluster folder on each node.

C. Schedule an hourly backup of the HKEY_LOCAL_MACHINE\System registry key on both nodes.

D. In the Failover properties for the Cluster group, specify a Threshold of 1 and Period of 1 hour.

Answer: A

15. You are the administrator of a two-node Windows 2000 Advanced Server cluster that serves as an application server for your company. The cluster runs a resource-intensive, critical application. You want to be able to run diagnostics on the application and the cluster nodes after failover. Business hours for your company are 8:00 A.M. to 6:00 P.M., and the application must be available during these hours. You want to configure the failback policy for the application. What should you do?

A. Configure the Application resource group properties to Prevent failback.

B. In the Application resource group properties, configure both nodes as preferred owners.

C. Configure the Application resource group properties to Allow failback between 1 and 4 hours.

D. Configure the Application resource group properties to Allow failback between 4 and 1 hours.

Answer: A

16. You are the administrator of a two-node Windows 2000 Advanced Server cluster that provides file, print, and application services for your company. The cluster has two Physical Disk resources. One of these resources is used for the file and print resources, and one is used for the application resources. NodeA is the preferred owner of the file and print resources, and NodeB is the preferred owner of cluster applications. You install a new application named AppZ to the cluster. After the installation, users report that their applications are not available. The Cluster Administrator reveals that both nodes are operating but that all of the applications in the Application resource group are offline on NodeB. You need to ensure that the all other applications are available to the users while you troubleshoot AppZ. What should you do?

A. Prevent failback for the Application resource group.

B. Increase the failover threshold value for the Application resource group.

C. Click Do not restart in the Advanced tab of the AppZ resource Properties dialog box.

D. On the Advanced tab for the AppZ resource Properties dialog box, clear the Affect the group check box.

Answer: D

17. You are the administrator of a two-node Windows 2000 Advanced Server cluster. The cluster storage contains three Physical Disk resources named M, R, and S. NodeA is a file and print server for the manufacturing department and uses Physical Disk resource M. NodeB is an application server for the research department and uses Physical Disk resource R.

You add a new research application, named ResApp, to the cluster, with NodeB designated as the preferred owner. The application is a member of the Application resource group and uses Physical Disk resource R. Users report that the access times to the research applications are now excessively long. The CPU utilization for the cluster nodes is shown in the following table.

Node	Average CPU utilization before installing ResApp	Average CPU utilization after installing ResApp
NodeA	60%	60%
NodeB	72%	80%

You need to reduce the access times for the research applications while maintaining high availability. What should you do?

A. Move ResApp to a new resource group on Physical Disk resource M, and specify NodeB as the preferred owner.

B. Move ResApp to a new resource group on Physical Disk resource M, and specify NodeA as the preferred owner.

C. Move ResApp to a new resource group on Physical Disk resource S, and specify NodeB as the preferred owner.

D. Move ResApp to a new resource group on Physical Disk resource S, and specify NodeA as the preferred owner.

Answer: D

18. You are the administrator of a file cluster that has been stable for several months. The cluster configuration is shown in the exhibit. (Click the Exhibit button.)

You need to perform hardware maintenance on Ncf02b. From your computer, you use the Cluster Administrator to move all of the groups to Ncf02a. Next, you turn off Ncf02b. During the move, you mistakenly take the default Cluster group offline, and you immediately lose connection to the cluster. Using the Cluster Administrator, you attempt to reconnect to the cluster by the name of cf-blv02. The reconnection is unsuccessful, and you receive the following message.

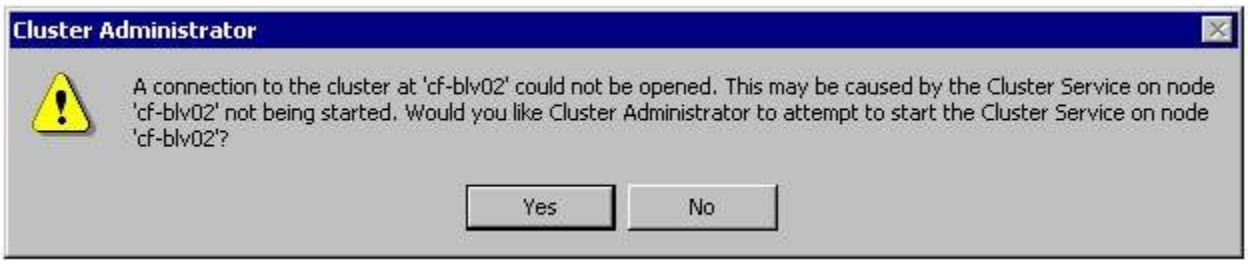

You click Yes and then receive the following error message.

You want to use the Cluster Administrator to establish a connection, allowing you to bring the Cluster group resources back online. What should you do?

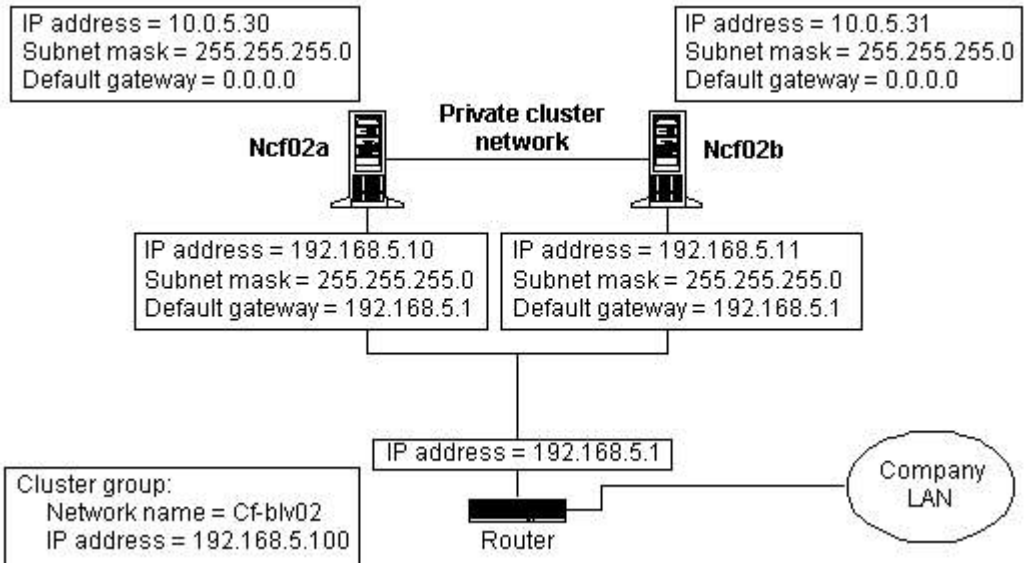

A. Use the Cluster Administrator to connect to the cluster by using the name Ncf02a.

B. Restart Ncf02b, and connect to the Cluster Administrator by using the name cf-blv02.

C. Use the Cluster Administrator to connect to the cluster by using IP address 192.168.5.100.

D. Stop and then start the Cluster service on Ncf02a. Connect to the Cluster Administrator by using the name cf-blv02.

Answer: A

19. You are the administrator of a two-node Windows 2000 Advanced Server cluster. The cluster serves as a high-traffic Web server for the marketing department and as a file server for the accounting and marketing departments. NodeA is the preferred owner of all marketing resources, and NodeB is the preferred node of all accounting resources. Each node contains separate network adapters that are dedicated for cluster communications, the accounting subnet, and the marketing subnet. The overall

utilization on the marketing subnet is equal to 70 percent of the total network. The average utilization for the network is 50 percent. You notice that the marketing network adapter on NodeA is dropping packets. Marketing users report that access to the cluster is slow. You want to improve cluster access times. What should you do?

A. Move the marketing Internet Information Services (IIS) resource group to NodeB.

B. Move the marketing File Share resource group to NodeB.

C. On both nodes, add a network adapter for the accounting subnet.

D. Select All communications in the network adapter properties for the cluster network.

Answer: B

20. You are the administrator of a Windows 2000 Advanced Server cluster named Cluster1. The cluster consists of two nodes that are designated NodeA and NodeB. The cluster has an IP Address resource named AdminAddress. You use the IP address to access the cluster for administration and maintenance. The IP Address resource is configured with NodeA as the only possible owner. Another administrator accidentally unplugs one of the network cables from NodeA. The AdminAddress resource fails, and it does not start after you plug in the network cable. You need to configure the AdminAddress resource to automatically start when the network cable is plugged in again. What should you do?

A. Use the Cluster Administrator to modify the Pending Timeout property for the AdminAddress resource to 5 seconds.

B. Run the CLUSTER Cluster1 RESOURCE AdminAddress /prop RetryPeriodOnFailure=5000 command.

C. Use the Cluster Administrator to configure the AdminAddress resource to fail only after a 5-second timeout.

D. Run the CLUSTER Cluster1 RESOURCE AdminAddress /prop RestartPeriod=500 command.

Answer: B